POLYPURE SYSTEMS, INC.
C SERIES C-1100

SECTION VIEW

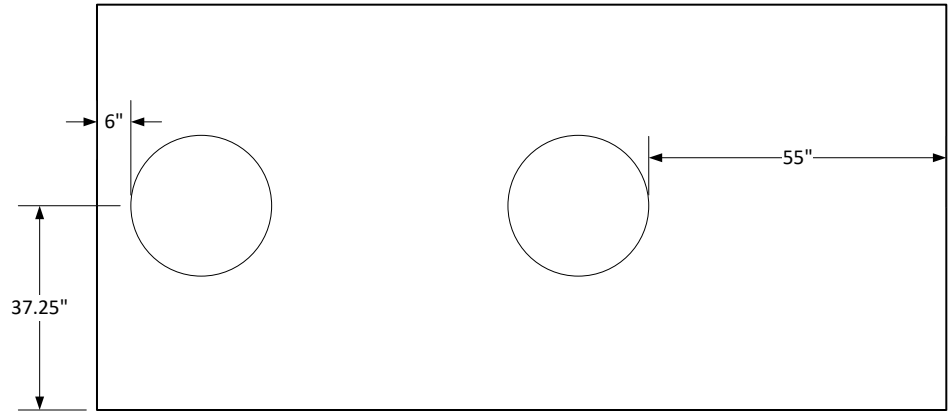

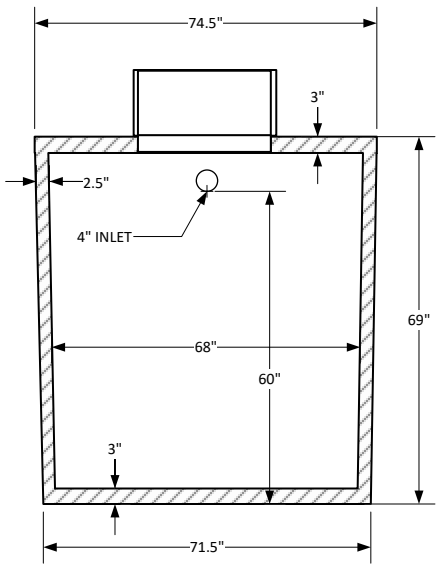

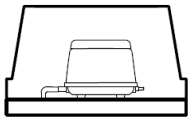

AERATOR IN DRY
VENTILATED LOCATION

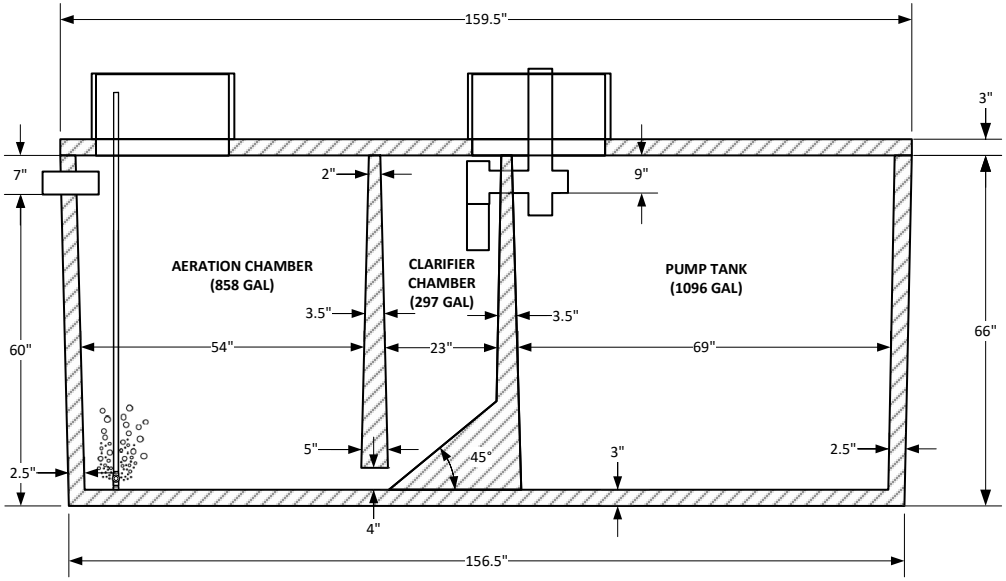

POLYPURE Systems, Inc.	POLYPURE C-1100			
	CONCRETE: 5000 PSI MIN – 28 DAY STRENGTH REINFORCEMENTS: MEET OR EXCEED ASTM A-615 OR A-185			
ALL DIMENSIONS IN INCHES	SIZE	MATERIAL CONCRETE	DRAWN E. CRUSE	REV
± 0.25 UNLESS SPECIFIED OTHERWISE	SCALE NTS	8/24/2024	SHEET 5 OF 6	